EASY TO INSTALL

- **HCDB "A" replaces existing hydraulic drum brakes on bridge drives**

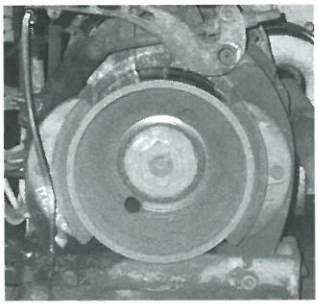

1. Existing 18" drum brake

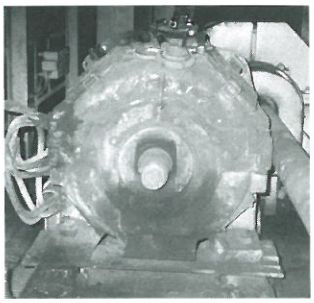

2. Remove brake and drum.

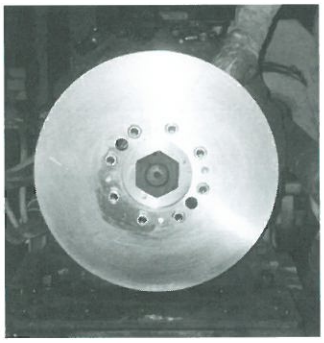

3. Install disc and hub

4. Installation complete.

EASY TO MAINTAIN

- **No adjusting for wear is required**
- **Replacing friction pads is quick and easy**

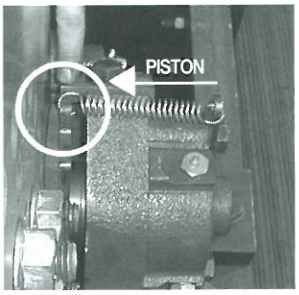

1. Replace friction pads when piston is fully extended

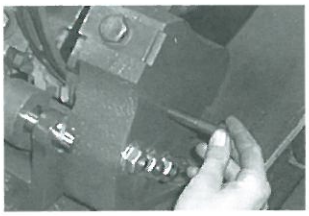

2. Retract piston using bolt supplied in friction pad kit.

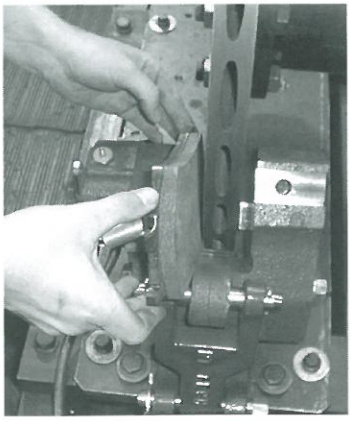

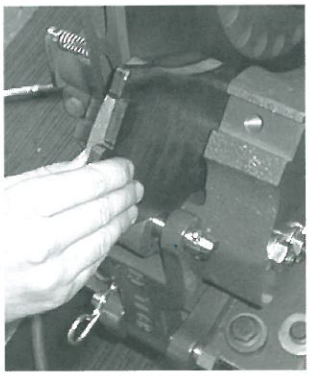

3. Remove and replace friction pads.

HCDB "A" Hydraulic Caliper Disc Brakes

- ***Replaces existing 10, 14, and 18" drum brakes on bridge drives***
- ***Operates with existing pedal/master cylinder***
- ***Uses ventilated discs for increased heat dissipation capability***
- ***Automatic wear compensation***

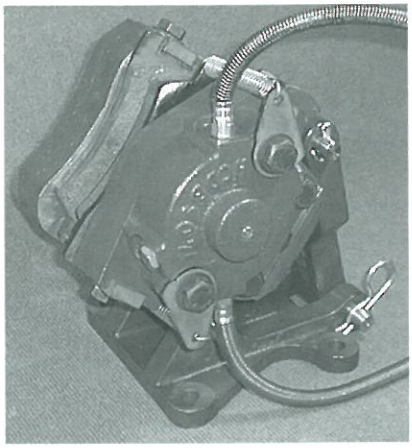

The HCDB "A" is a hydraulically actuated caliper disc brake that directly replaces existing drum brakes. Their overall size is similar to the drum brakes they replace. All of the existing hydraulic components (cylinder, reservoir, circuitry) remain unchanged. Simply remove the existing drum brake and replace it with an HCDB "A" caliper brake.

The HCDB "A" is wear compensating. When released, the brake maintains a consistent operating clearance as the friction pucks wear. This gives the pedal a short and consistent stroke. When the friction pucks wear out, replacing them is quick and easy.

Designed specifically for the North American Metals Market, the HCDB "A" fits into the existing available space. The brake assembly tucks under the disc so that it does not protrude. Its unique design allows the caliper assembly to accommodate misalignment and axial movement.

The HCDB "A" uses a ventilated disc for superior thermal performance.

HCDB 1824A	HCDB 1419A	HCDB 1015A
900 lb-ft	600 lb-ft	425 lb-ft
24 5/8" disc	19 1/2" disc	15 1/2" disc

PT Tech
POWER TRANSMISSION TECHNOLOGY INC.
1441 WOLF CREEK TRAIL, P.O. BOX 305
SHARON CENTER, OH 44274-0305
TEL (330) 239-4933 • FAX (330) 239-2012

HCDB "A" CALIPER DISC BRAKES

Visit our website: www.pttech.com

HCDB "A" brakes outperform drum brakes

and are far easier to maintain

HCDB "A" DISC BRAKE vs. DRUM BRAKE COMPARISON						
	10" DRUM	HCDB 1015A	14" DRUM	HCDB 1419A	18" DRUM	HCDB 1824A
Torque per brake-1 brake, lb-ft	425	425	600	600	900	900
Torque per brake-2 brakes, lb-ft	260	425	350	600	550	900
Pedal stroke*	8"	2"	8"	2"	8"	2"
Pedal stroke**	8"	3"	8"	3"	8"	3"
Height "Y"	19.4	16.8	28 1/2"	21 1/8"	25 7/8"	34 3/8"
Width "X"	8.2	9.8	25 3/8"	26 1/8"	27 5/8"	29 1/8"
Exposed swept area, in^2	143	327	240	436	134	268
Rotating inertia, lb/ft^2	4.25	9	24	28	76	70
Disc/Hub weight, lbs	x	51	x	128	x	201
Drum weight, lbs	55	x	121	x	230	x
Thermal mass*** lbs	23	35	57	51	110	90
Max. Pressure psi	x	450	x	450	x	450

HCDB "A" is a hydraulically applied caliper disc brake. Unlike the drum brakes they replace, the HCDB "A" actuating cylinder displacement per stroke is very small. The control cylinder displacement is sufficient to operate the actuating cylinders in two brakes with 3" of pedal stroke. This means for a given force applied to the pedal, the torque per brake is the same for one or two brake systems.

The torque per brake in a two drum brake system is 60% of that in a one drum brake system. In a two brake system the actuating cylinders on the brakes have a smaller diameter and displacement than the ones on a one brake system. This compromise allows the same control cylinder to be used on either system. However, a decrease in the actuating cylinder's diameter reduces the available force to operate the drum brake. This results in a decrease in available torque per brake.

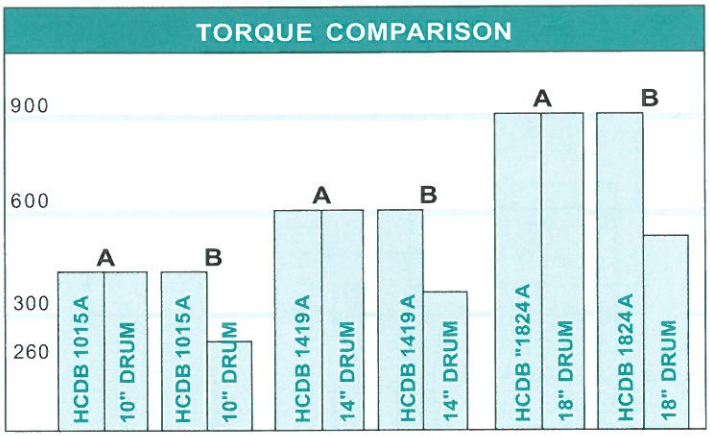

A = ONE BRAKE SYSTEM **B** = TWO BRAKE SYSTEM

THE PT TECH DIFFERENCE

Employee ownership and commitment

In 1991 we became an ESOP company and have been increasing the employee ownership each year. Employee ownership allows the people you work with day-to-day to have the authority to make wide-ranging decisions, offering customers faster response times when critical actions are required.

APPLICATION ASSISTANCE

PT Tech PT Tech is the technical leader in applying caliper disc brakes into the steel industry. We believe each brake application in bridge drives should be reviewed. An application datasheet is available upon request.

FIELD SERVICE

PT Tech offers field service, frequently assisting customers with their initial installation. Also, we conduct maintenance seminars at our customer's facilities.

We can be reached 24-hours a day at our Service Hotline: **800-717-4358.**

HCDB 1824A

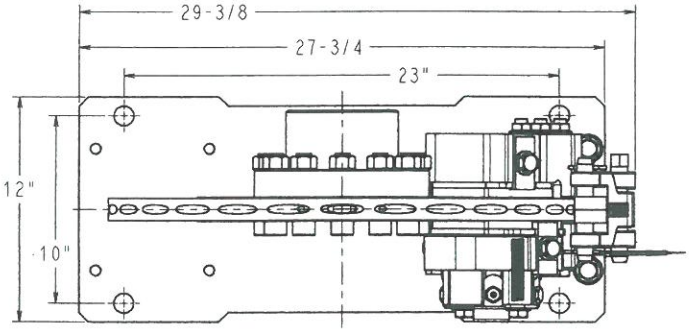

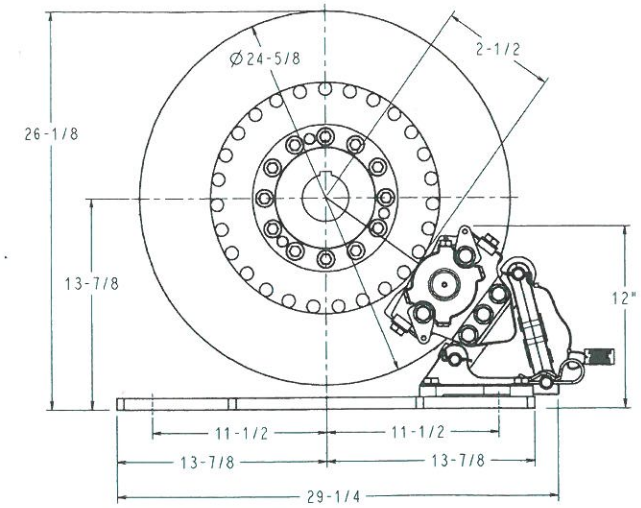

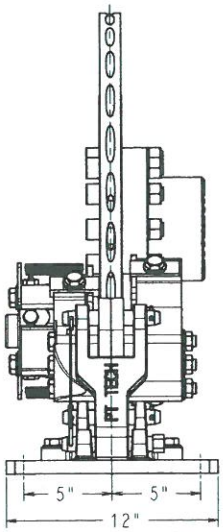

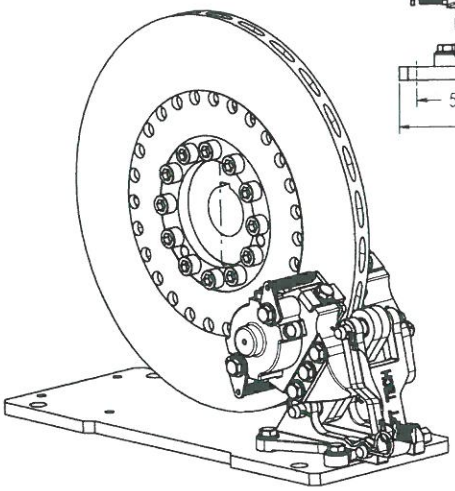

HCDB 1419A

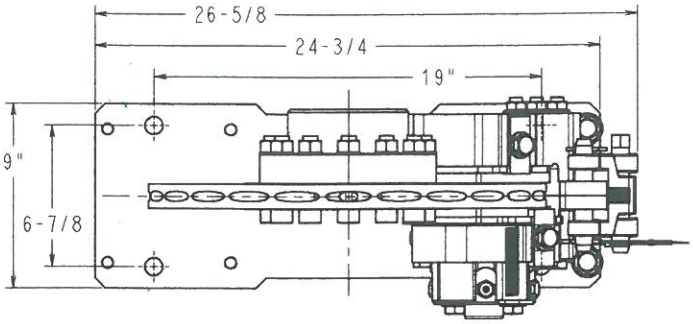

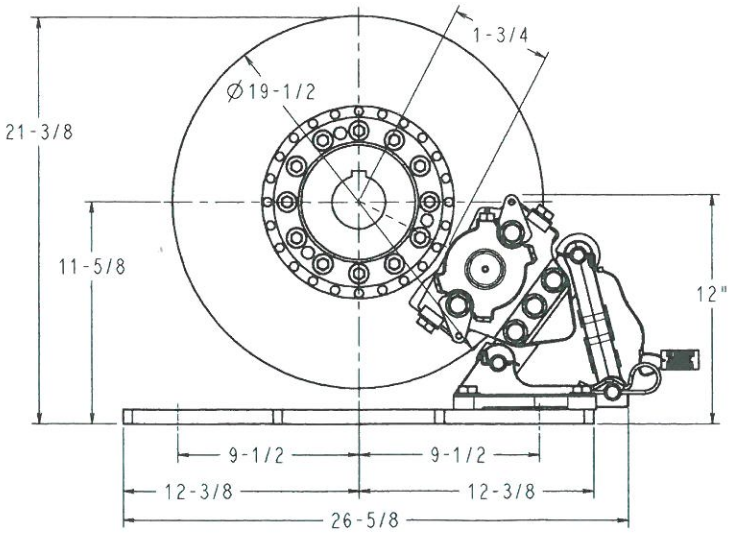

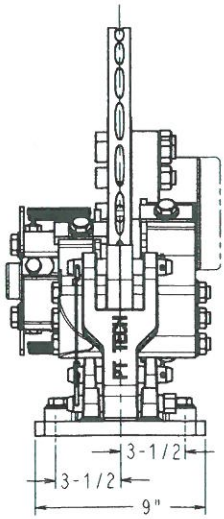

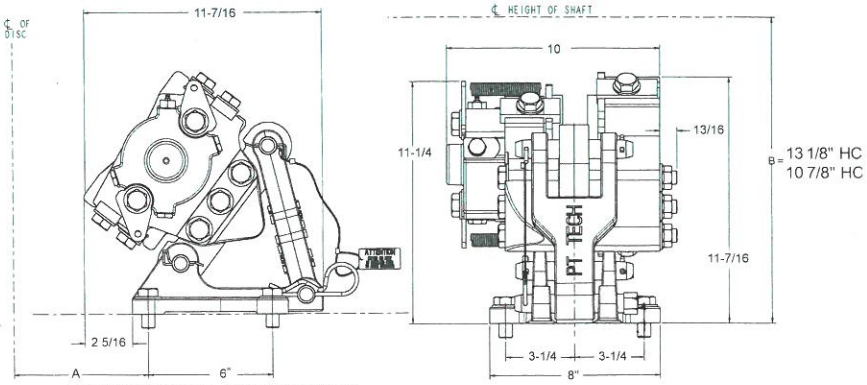

A = 7" HCDB1824A, 5 3/4" HCDB1419A

HCDB 1015A RIGHT & LEFT HAND

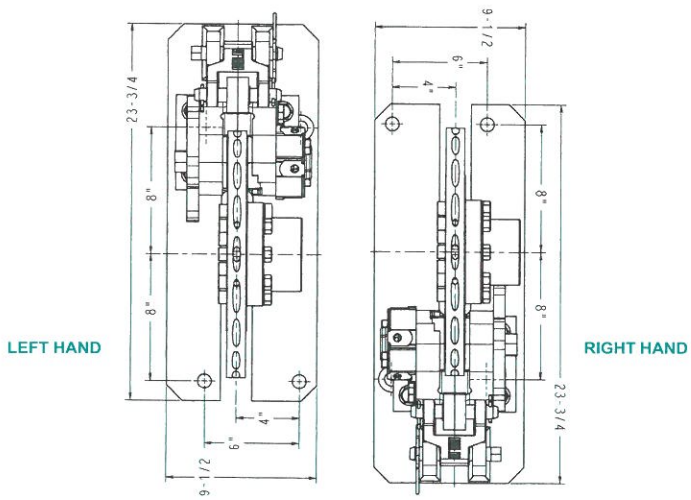

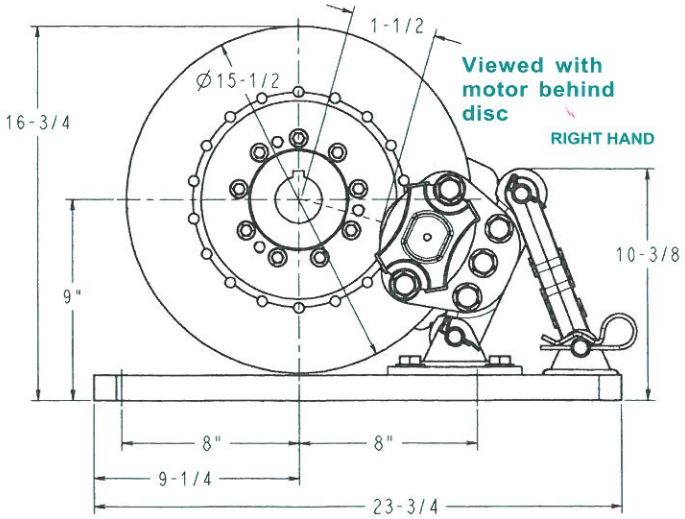

The HCDB 1015A base is asymmetrical. There is a **RIGHT HAND** and a **LEFTHAND** orientation.

When looking at the disc with the motor behind the disc, specify HCDB 1015A-**RH** if the brake will be positioned on the right side of the disc. When positioning it on the left side of the disc, specify HCDB 1015A-**LH**.

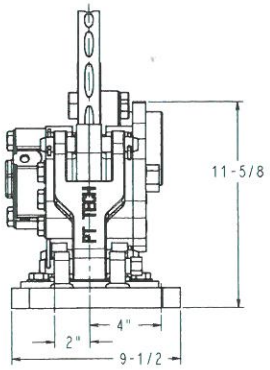

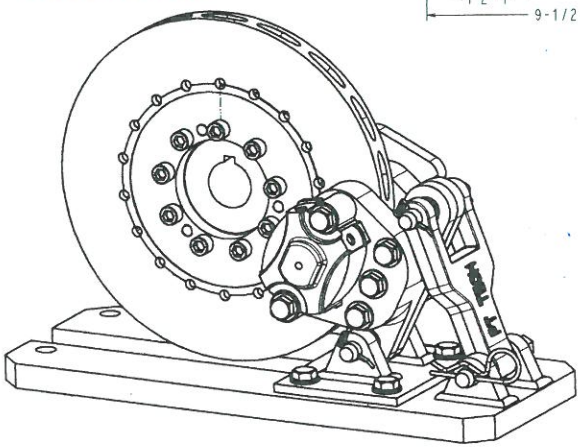

1824A
1419A

DISC DATA

VENTILATED DISC

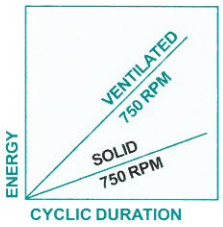

When disc speed is more than 500 rpm, ventilated discs have significantly greater heat dissipation capability than solid discs. This can be critical in bridge brake applications. The entire kinetic energy of the crane must be handled by the brake if the operator does not plug reverse the motors. When operating at motor speed on an AC powered crane, the ventilated disc can have up to 300% more thermal dissipation capacity than a solid disc.

HCDB 1015A INSTALLATION

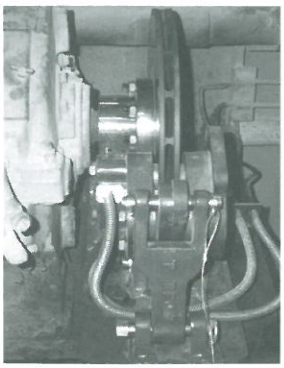

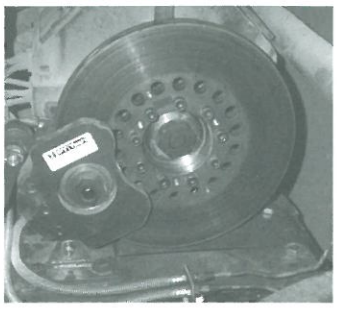

WARRANTY: PT Tech guarantees all its products will leave the factory in good condition. PT Tech warrants its products against defects in workmanship and material for a period of 365 days (one year) after shipment. Adjustments under this warranty will be made only after completion of inspection of the part or product in PT Tech's factory. PT Tech's liability under the warranty shall extend only to the replacement or correction of any defective part or product determined by PT Tech's inspection as not conforming to this warranty. Under no circumstances shall PT Tech be liable for consequential or incidental damages. This warranty shall not apply to any product which shall have been repaired or altered without PT Tech's knowledge and consent or operated or installed contrary to PT Tech's instruction or subjected to misuse, improper maintenance, or damaged by accident or negligence.

PERFORMANCE ASSURANCE: Rated torque and speeds are provided by PT Tech to assist the buyer in selecting the proper product. In addition, engineering assistance is offered by PT Tech for design and application of custom designed drives. Since the actual performance characteristics of the buyer's equipment cannot be completely analyzed nor duplicated in laboratory tests, performance assurance of all PT Tech products in the buyer's applications is the responsibility of the buyer.